SQUARE ALUMINUM POLE - PPRAH SERIES

BRIGHTLOTS

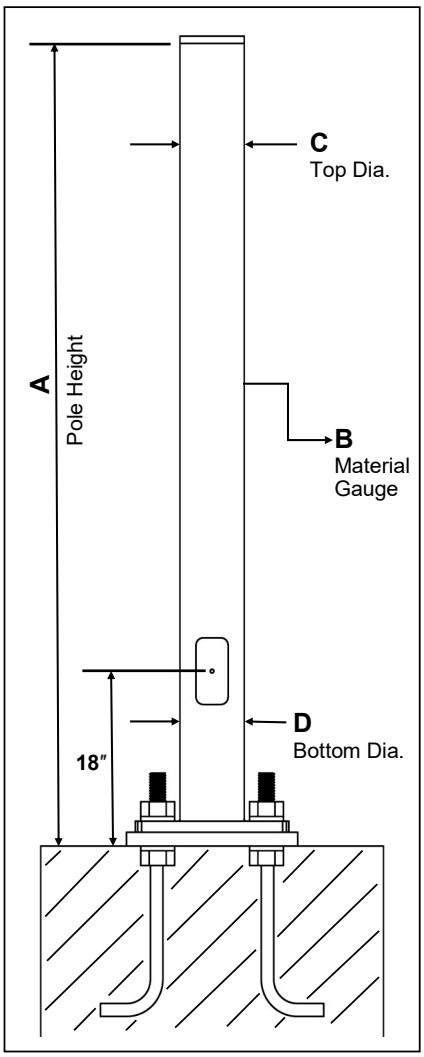

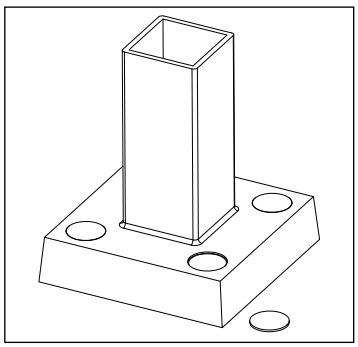

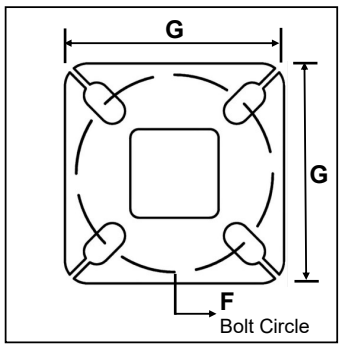

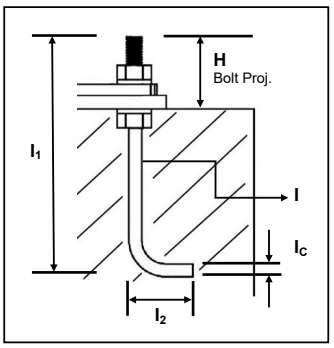

Pole Shaft

The pole shaft will be constructed of seamless extruded tube of 6XXX Series Aluminum Alloy per the requirements of ASTM B221. The shaft assembly shall be full-length heat treated after base weld.

Finish Options

- 02 = Satin Aluminum
- BA = Black Powder Coat
- BH = White Powder Coat
- BW = Dark Bronze Powder Coat
- BV = Dark Green Powder Coat
- GC = Gray Powder Coat

Base Style

4-Bolt Cast Aluminum Base Flange of Alloy 356-T6 with Aluminum Snap-In Bolt Covers.

Pole Cap

Aluminum with Stainless Steel Screws (Tenon Option Available - See Mounting Designation)

Anchorage

Anchorage Kit will include four (4) L-shaped Steel Anchor Bolts conforming to AASHTO M314-90 Grade 55. Ten inches (10”) of thread end will be galvanized per ASTM A153. Kits will contain four (4) Hex Nuts, four (4) Lock Washers, and four (4) Flat Washers (all components Galvanized Steel). A bolt circle template will be provided.

Hand Hole Covers

4-5” Butt Square -2" x 4" Handhole with square Lap Style Aluminum Door and two (2) Stainless Steel Self-Tapping Attaching Screws. A Grounding Provision incorporating a tapped 1/4"-20NC Grounding Provision is provided opposite the Handhole.

6"+ Butt Square - 3" x 5" Handhole with square Lap Style Aluminum Door and two (2) Stainless Steel Self-Tapping Attaching Screws. A Grounding Provision incorporating a tapped 1/4"-20NC Grounding Provision is provided opposite the Handhole.

C Butt Sq.	D Top Sq.	F Bolt Cir. Dia.	G Base Sq.	H Bolt Proj.	I Bolt Size
4	4	8.5-9.5	9.875	1.5	0.75 x 17 x 3
5	5	10.5-11.5	11.25	2	0.75 x 30 x 3
6	6	12-13	12.75	2.25	1 x 36 x 4

A MGT. HGT.	B WALL THICKNESS	C BUTT SQ.	TOTAL LUM. WEIGHT	MAXIMUM EPA						PART NO
				90	100	110	120	130		
10	0.125”	4	100	17.6	13.8	12.8	10.4	8.6		PPRAH-410B
15	0.125”	4	70	9.8	7.2	6.6	5.0	3.8		PPRAH-415B
20	0.188”	5	100	15.8	11.8	10.6	8.0	6.0		PPRAH-520D
25	0.188”	5	65	14.0	10.0	8.8	6.2	4.4		PPRAH-525D

MOUNTING OPTIONS

Side Drill Mount

Includes removable pole cap.

NOTE: A luminaire drilling template must be supplied at time of order.

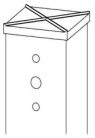

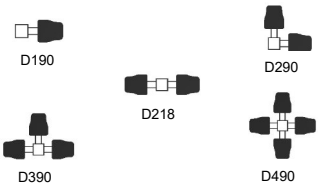

Tenon Mount

For Tenon Mount applications specify both Tenon diameter and length

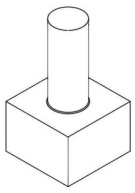

TENON

T204 - 2-3/8″ O.D. x 4″
T304 - 2-7/8″ O.D. x 4″
T356 - 3-1/2″ O.D. x 6″
T406 - 4″ O.D. x 6″
TCUS– Custom Tenon**