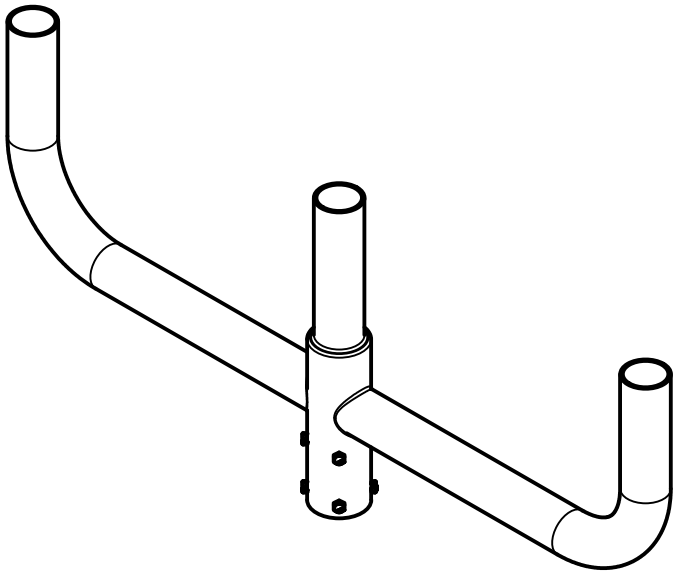

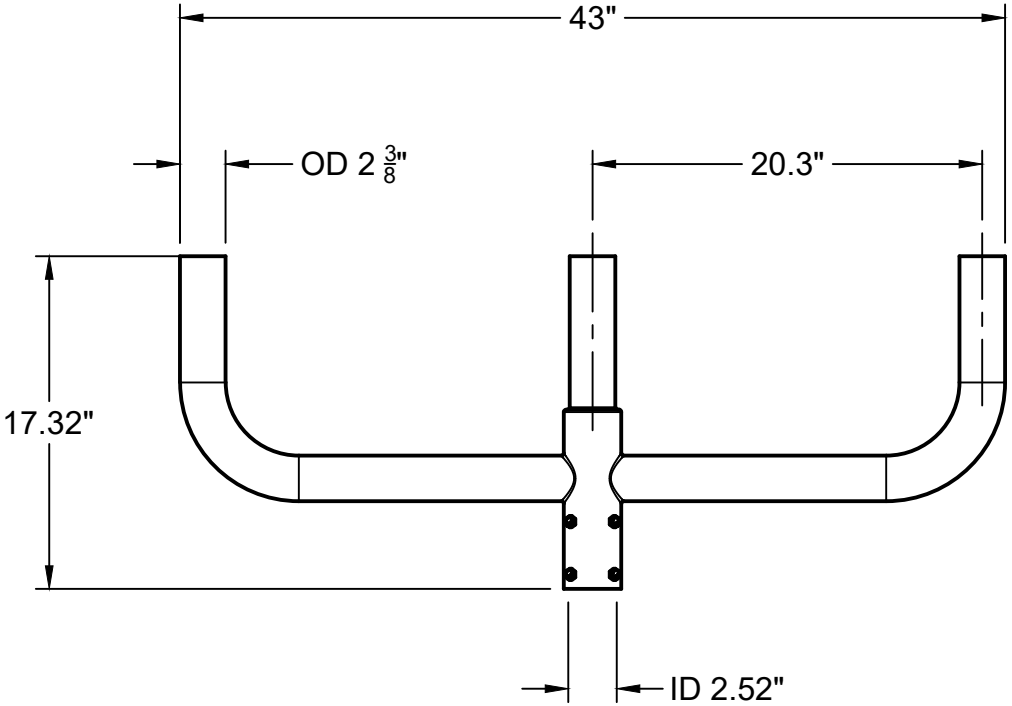

Brightlots.com
800 E. Northwest Hwy, Suite 700
Palatine IL, 60074 | 888-364-8802

BRIGHTLOTS

TITLE	**STEEL BULLHORN WITH 3 ARMS AT 180°**	
SIZE A	DWG NO BL-BH-3-180-RDV	REV 0
DRAWN BY SMIT RAMANI	DATE 18 May 2023	